www.faymakine.com

SOLENOID VALVE COILS

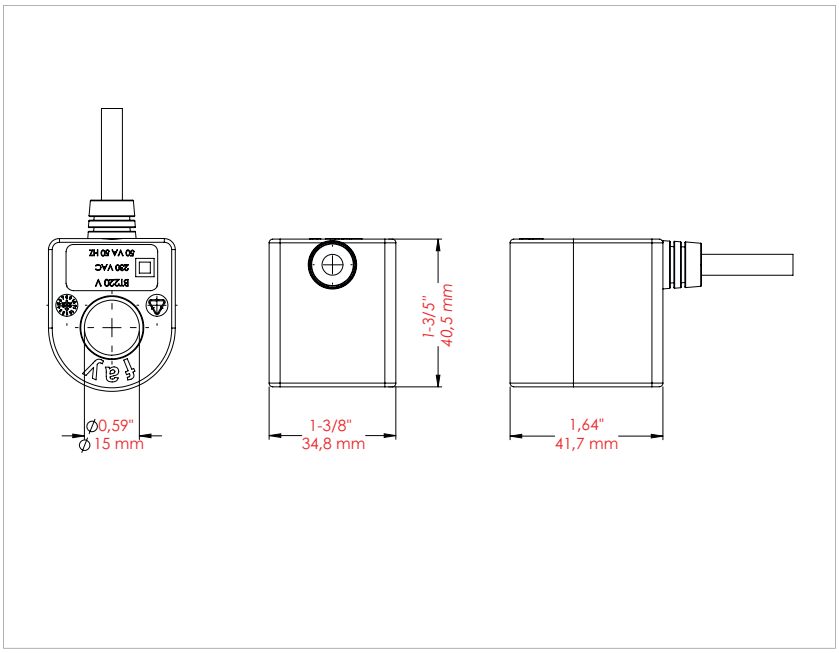



MODEL	VOLTAGE	POWER	RESISTANCE	CURRENT (Amper)	FREQUENCY (Hz)	IP CLASS
B12V	12VDC	30W	4 Ohm	2,2 A	-	IP 66
B24V	24VDC	20W	23 Ohm	0,85 A	-	IP 66
B220V	220VAC	50VA	500 Ohm	0,2 A	50 Hz	IP 66

CERTIFICATES	ELECTROMAGNETIC COMPATIBILITY EMC-2021147C (Products Approval Standard EN IEC 55014-1 / EN IEC 61000-3-2+A1 / EN 61000-3-3+A1 / EN IEC55014-2) LOW VOLTAGE DIRECTIVE LVD-2021147C (Products Approval Standard IEC 60335-1 / EN 60335-1+A11+A13+A1+A2+A14 / EN 62233)

TSE-HYB GAZMER ISO 9001 BUREAU VERITAS Certification IEP ATEX ASCE 25-16 TS 12884 TÜV C US ASCE 25-16