www.faymakine.com

SOLENOID VALVE ATEX COILS

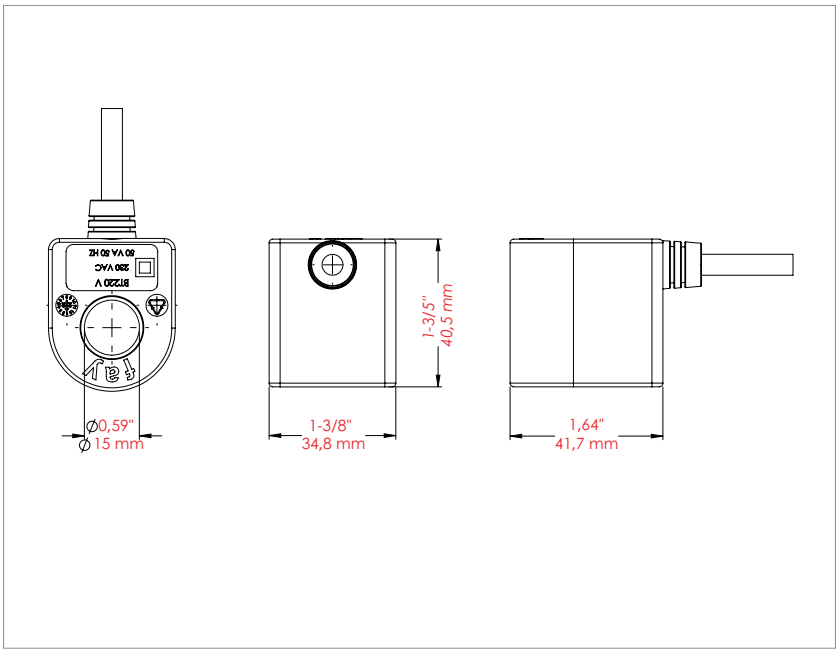



MODEL	VOLTAGE	POWER	RESISTANCE	CURRENT (Amper)	FREQUENCY (Hz)	IP CLASS
B12V	12VDC	30W	4 Ohm	2,2 A	-	IP 66
B24V	24VDC	20W	23 Ohm	0,85 A	-	IP 66
B220V	220VAC	50VA	500 Ohm	0,2 A	50 Hz	IP 66

CERTIFICATES

II 2G Ex mb IIIB T4 Gb
II 2D Ex tb IIIB T120°C Db (Products Approval Standard EN IEC 60079-0 / EN 60079-18 / EN 60079-31)
ELECTROMAGNETIC COMPATIBILITY EMC-2021147C (Products Approval Standard EN IEC 55014-1 / EN IEC 61000-3-2+A1 / EN 61000-3-3+A1 / EN IEC55014-2)
LOW VOLTAGE DIRECTIVE LVD-2021147C (Products Approval Standard IEC 60335-1 / EN 60335-1+A11+A13+A1+A2+A14 / EN 62233)