MECHANICAL EARTHQUAKE SWITCH
EQS SWITCH

www.faymakine.com

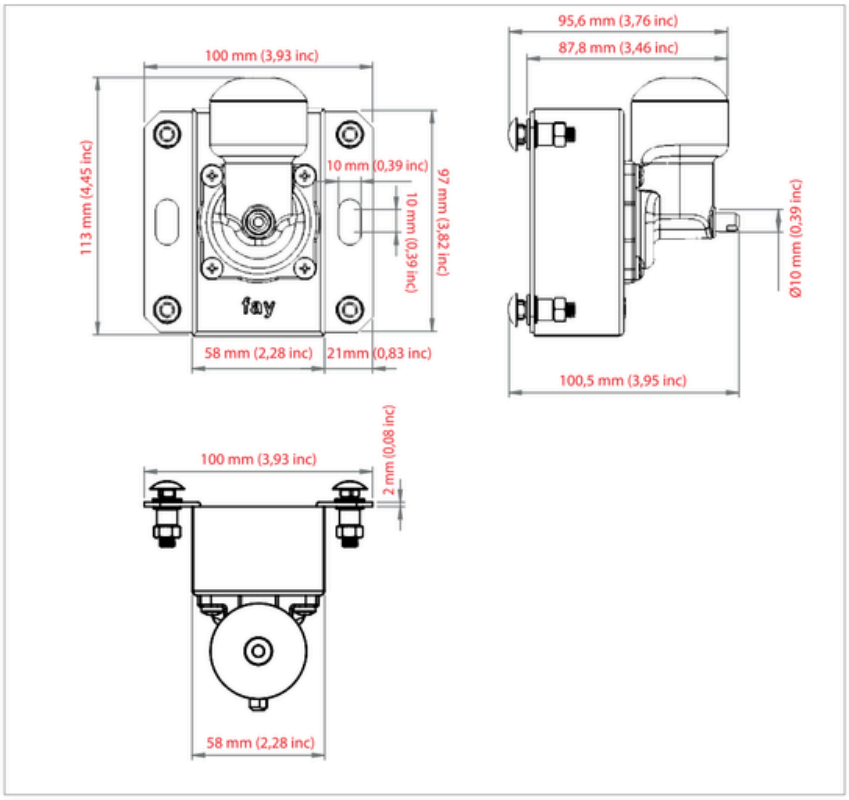



MODEL	TEMP. RANCE	ELECTRICAL VALUE	MATERİAL	WEIGHT
EQS - SWITCH	-23°C(-10°F) to +60°C (+140°F)	16 A - 125/250 VAC	Aluminium / Brass / Stainless - Carbon Steel	1,725 lb / 0,784 kg

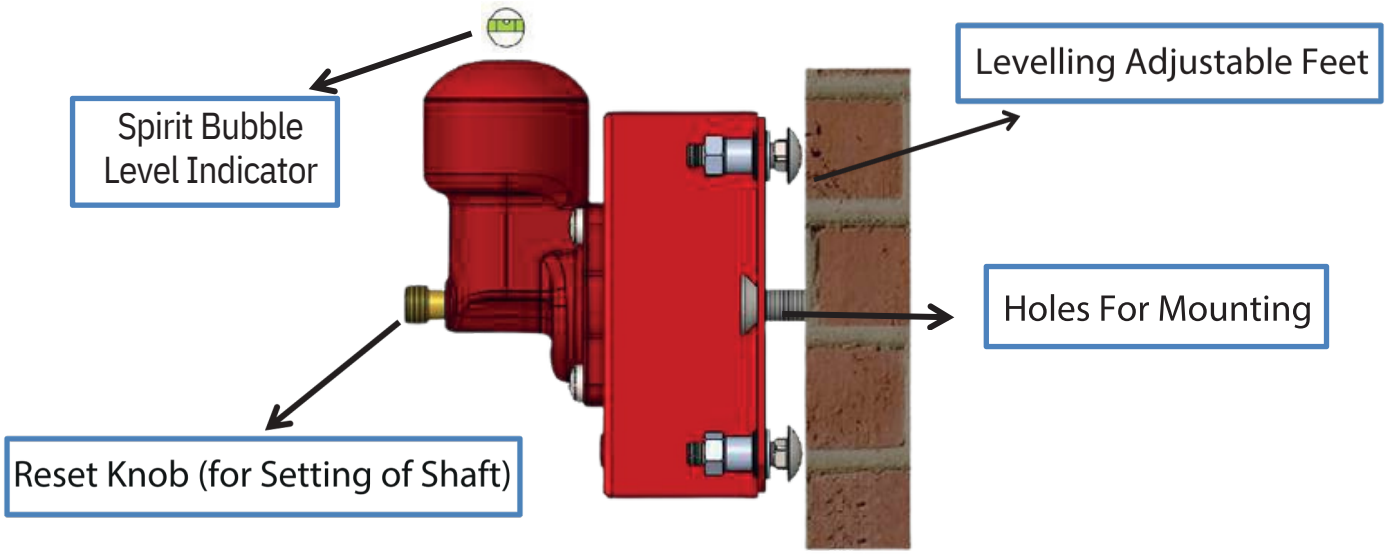

***The EQS is a seismic driven unit consisting of a mechanical sensor. It should be assembled on columns or curtain concrete that preceives seismic motion.

***The product has adjustable feet. It is brought to the scale with the help of these feet.

www.faymakine.com

MECHANICAL EARTHQUAKE SWITCH
EQS - SWITCH

Normally Open

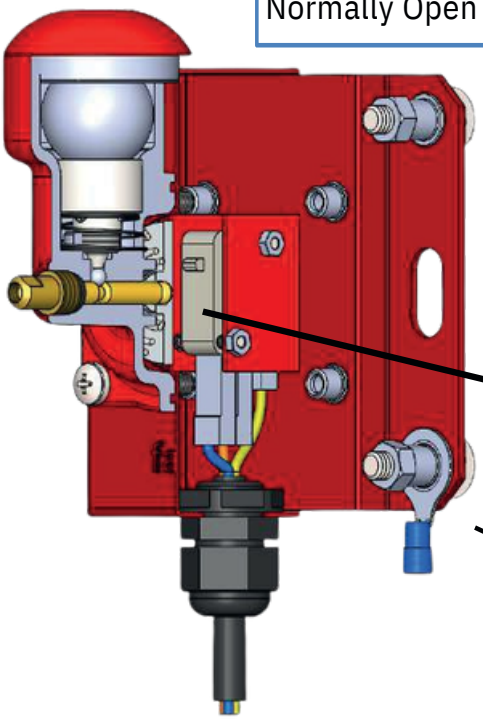

Electical Values : 16A / 125/250 VAC
Dry contacts : NO / NC / C Common Contact : C
NO: BLUE NC: BROWN C: YELLOW

Before The Earthquake : NO (Blue and Yellow)

Ground Connection

Normally Closed

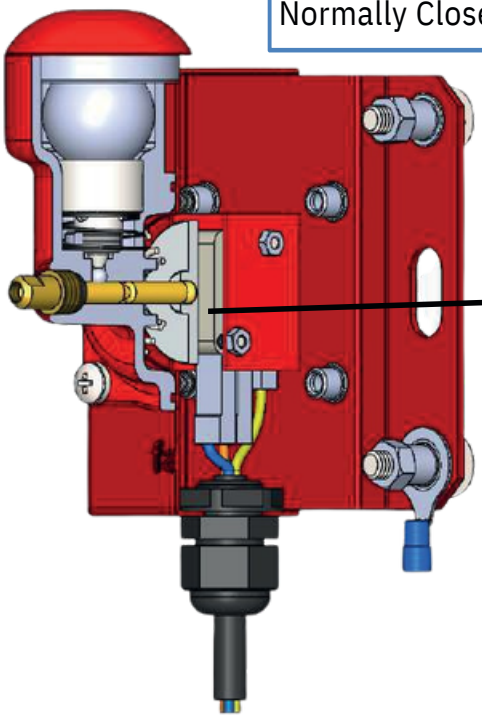

After The Earthquake : NC (Brown and Yellow)

CERTIFICATES	TUV Austria Turk (Products Approval Standard 2006/42/EC – TS EN 12100 - 2014/35/EU - TS EN 60204-1)
APPLICATION	Elevator, Generator, Electrical Control Panel, Fire Alarm Panel
SEISMIC STANDART	TS 12884 / ASCE 25-16