www.faymakine.com

SLFM 20 NORMALLY OPEN (NO) MANUALLY OPERATING SOLENOID VALVE 3/4'' Threadad - 0,5 Bar

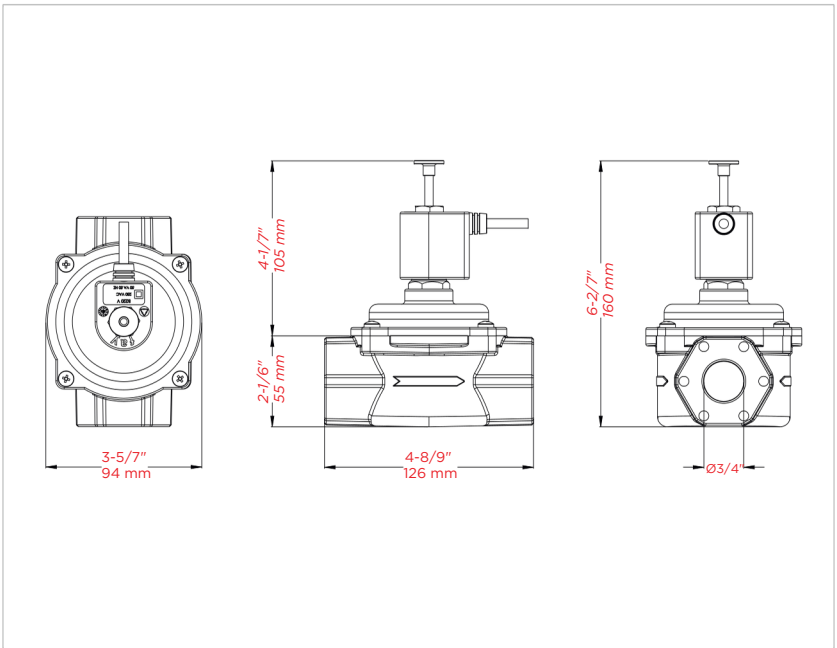



MODEL	PIPE SIZE	DN	TEMP. RANCE	MAX. PRESSURE	WEIGHT
SLFM 20	3/4"	20	-23°C(-10°F) to +66°C (+150°F)	0,5 bar / 7 PSI	2,017 lb / 0,917 kg

Material **MODEL**	Min. Turning Effort	Min. Bending Moment	**CV**	**Eqv Lenght of p pe (ft)**
Aluminium Alloy / Brass / Stainless Steel	560 Inc lbf / 63,3 Nm	18,0 Lb / 8,6 kg	17	0.6

FLOW CAPACITY TABLE IWC/PSIG - Capacity S.C.F.H

Pressure Drop		Inlet Pressure (iwc)		Inlet Pressure (psi)					
psi	iwc	8" iwc	14" iwc	3	5	7	10	20	60
0.0036	0.1	295	298	321	339	355	379	450	660
0.0072	0.2	418	421	454	479	503	536	636	933
0.0108	0.3	512	515	556	587	616	657	778	1142
0.0144	0.4	591	595	642	677	711	758	899	1319
0.018	0.5	660	665	718	757	795	848	1005	1475
0.0216	0.6	723	728	786	829	870	929	1101	1615
0.0252	0.7	781	787	849	896	940	1003	1189	1745
0.0288	0.8	835	841	907	957	1005	1072	1271	1865
0.0324	0.9	885	892	962	1015	1066	1137	1348	1978
0.036	1.0	933	940	1014	1070	1123	1198	1421	2085
0.072	2.0	1318	1328	1433	1512	1587	1694	2008	2948
0.108	3.0	1612	1624	1753	1850	1942	2073	2458	3610
0.144	4.0	1860	1873	2022	2134	2241	2392	2837	4167
0.18	5.0	2077	2092	2259	2384	2503	2672	3170	4658

www.faymakine.com

SLFM 20 NORMALLY OPEN (NO) MANUALLY OPERATING SOLENOID VALVE 3/4'' Threadad - 0,5 Bar

FLOW CAPACITY TABLE IWC/PSIG - Capacity m^3/h

Pressure Drop		Inlet Pressure (iwc)		Inlet Pressure (psi)					
psi	iwc	8" iwc	14" iwc	3	5	7	10	20	60
0.0036	0.1	8,26	8,34	8,99	9,49	9,94	10,61	12,60	18,48
0.0072	0.2	11,70	11,79	12,71	13,41	14,08	15,01	17,81	26,12
0.0108	0.3	14,34	14,42	15,57	16,44	17,25	18,40	21,78	31,98
0.0144	0.4	16,55	16,66	17,98	18,96	19,91	21,22	25,17	36,93
0.018	0.5	18,48	18,62	20,10	21,20	22,26	23,74	28,14	41,30
0.0216	0.6	20,24	20,38	22,01	23,21	24,36	26,01	30,83	45,22
0.0252	0.7	21,87	22,04	23,77	25,09	26,32	28,08	33,29	48,86
0.0288	0.8	23,38	23,55	25,40	26,80	28,14	30,02	35,59	52,22
0.0324	0.9	24,78	24,98	26,94	28,42	29,85	31,84	37,74	55,38
0.036	1.0	26,12	26,32	28,39	29,96	31,44	33,54	39,79	58,38
0.072	2.0	36,90	37,18	40,12	42,34	44,44	47,43	56,22	82,54
0.108	3.0	45,14	45,47	49,08	51,80	54,38	58,04	68,82	101,08
0.144	4.0	52,08	52,44	56,62	59,75	62,75	66,98	79,44	116,68
0.18	5.0	58,16	58,58	63,25	66,75	70,08	74,82	88,76	130,42

FLOW CAPACITY TABLE IWC/PSIG - Capacity kW

Pressure Drop		Inlet Pressure (iwc)		Inlet Pressure (psi)					
psi	iwc	8" iwc	14" iwc	3	5	7	10	20	60
0.0036	0.1	87,14	88,03	94,82	100,14	104,87	111,96	132,93	194,96
0.0072	0.2	123,48	124,36	134,11	141,50	148,59	158,33	187,87	275,61
0.0108	0.3	151,24	152,13	164,24	173,40	181,97	194,08	229,82	337,35
0.0144	0.4	174,58	175,76	189,65	199,99	210,03	223,91	265,56	389,63
0.018	0.5	194,96	196,44	212,10	223,62	234,84	250,50	296,88	435,72
0.0216	0.6	213,57	215,05	232,18	244,89	257,00	274,43	325,24	477,07
0.0252	0.7	230,71	232,48	250,79	264,68	277,68	296,29	351,23	515,47
0.0288	0.8	246,66	248,43	267,93	282,70	296,88	316,67	375,45	550,92
0.0324	0.9	261,43	263,50	284,17	299,83	314,90	335,87	398,20	584,30
0.036	1.0	275,61	277,68	299,54	316,08	331,73	353,89	419,76	615,91
0.072	2.0	389,34	392,29	423,31	446,64	468,80	500,41	593,16	870,84
0.108	3.0	476,18	479,73	517,84	546,49	573,67	612,36	726,09	1066,39
0.144	4.0	549,44	553,28	597,30	630,38	661,99	706,60	838,05	1230,93
0.18	5.0	613,55	617,98	667,31	704,23	739,39	789,31	936,42	1375,97

CERTIFICATES	TUV Aus tria CE Attestation of Conformity Certificate (EN 12266-1/ EN 12516-3)
APPLICATION	Gasses : Natural Gas, LPG, methane, propane, air, etc... non corrosive gaseous fluids.
INFORMATION	Experiments were carried out with air. Calculations based on gas with a density of 0.64 and a calorific value of 37 MJ/m3. The measured flow value is arranged accor ding to 15 °C and 101.3 kPa pressure.

TSE-HYB GAZMER ISO 9001 BUREAU VERITAS Certification IEP ATEX ASCE 25-16 TS 12884 TÜV C US ASCE 25-16