www.faymakine.com

SLFM 25 NORMALLY OPEN (NO) MANUALLY OPERATING SOLENOID VALVE 1'' Threadad - 0,5 Bar

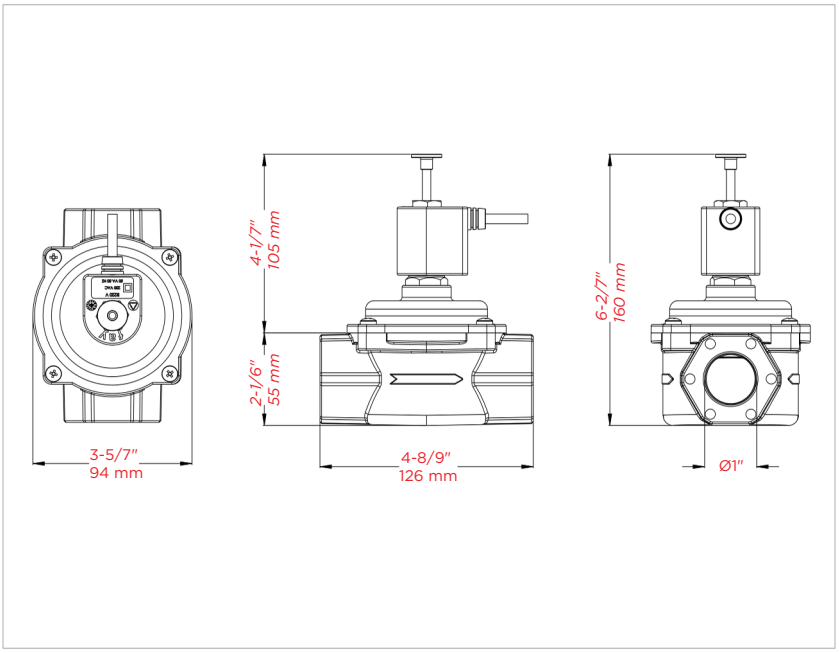



MODEL	PIPE SIZE	DN	TEMP. RANCE	MAX. PRESSURE	WEIGHT
SLFM 25	1"	25	-23°C(-10°F) to +66°C (+150°F)	0,5 bar / 7 PSI	1,910 lb / 0,868 kg

Material **MODEL**	Min. Turning Effort	Min. Bending Moment	**CV**	**Eqv Lenght of p pe (ft)**
Aluminium Alloy / Brass / Stainless Steel	750 Inc lbf / 84,7 Nm	32,0 Lb / 14,5 kg	23	1.1

FLOW CAPACITY TABLE IWC/PSIG - Capacity S.C.F.H

Pressure Drop		Inlet Pressure (iwc)		Inlet Pressure (psi)					
psi	iwc	8" iwc	14" iwc	3	5	7	10	20	60
0.0036	0.1	398	401	433	457	479	511	606	889
0.0072	0.2	563	567	612	646	678	723	857	1258
0.0108	0.3	690	695	750	791	830	886	1050	1540
0.0144	0.4	796	802	865	913	958	1022	1212	1779
0.018	0.5	890	897	968	1021	1071	1143	1355	1988
0.0216	0.6	975	982	1060	1118	1174	1252	1484	2178
0.0252	0.7	1053	1061	1145	1208	1267	1352	1603	2353
0.0288	0.8	1126	1134	1223	1291	1355	1446	1714	2515
0.0324	0.9	1194	1202	1298	1369	1437	1533	1818	2667
0.036	1.0	1258	1267	1368	1443	1515	1616	1916	2812
0.072	2.0	1777	1790	1932	2039	2140	2284	2708	3975
0.108	3.0	2174	2190	2364	2495	2619	2795	3315	4868
0.144	4.0	2507	2526	2727	2878	3021	3225	3826	5619
0.18	5.0	2800	2820	3046	3215	3375	3603	4275	6281

www.faymakine.com

SLFM 25 NORMALLY OPEN (NO) MANUALLY OPERATING SOLENOID VALVE 1'' Threadad - 0,5 Bar

FLOW CAPACITY TABLE IWC/PSIG - Capacity m^3/h

Pressure Drop		Inlet Pressure (iwc)		Inlet Pressure (psi)					
psi	iwc	8" iwc	14" iwc	3	5	7	10	20	60
0.0036	0.1	11,14	11,23	12,12	12,80	13,41	14,31	16,97	24,89
0.0072	0.2	15,76	15,88	17,14	18,09	18,98	20,24	24,00	35,22
0.0108	0.3	19,32	19,46	21,00	22,15	23,24	24,81	29,40	43,12
0.0144	0.4	22,29	22,46	24,22	25,56	26,82	28,62	33,94	49,81
0.018	0.5	24,92	25,12	27,10	28,59	29,99	32,00	37,94	55,66
0.0216	0.6	27,30	27,50	29,68	31,30	32,87	35,06	41,55	60,98
0.0252	0.7	29,48	29,71	32,06	33,82	35,48	37,86	44,88	65,88
0.0288	0.8	31,53	31,75	34,24	36,15	37,94	40,49	47,99	70,42
0.0324	0.9	33,43	33,66	36,34	38,33	40,24	42,92	50,90	74,68
0.036	1.0	35,22	35,48	38,30	40,40	42,42	45,25	53,65	78,74
0.072	2.0	49,76	50,12	54,10	57,09	59,92	63,95	75,82	111,30
0.108	3.0	60,87	61,32	66,19	69,86	73,33	78,26	92,82	136,30
0.144	4.0	70,20	70,73	76,36	80,58	84,59	90,30	107,13	157,33
0.18	5.0	78,40	78,96	85,29	90,02	94,50	100,88	119,70	175,87

FLOW CAPACITY TABLE IWC/PSIG - Capacity kW

Pressure Drop		Inlet Pressur e (iwc)		Inlet Pressure (psi)					
psi	iwc	8" iwc	14" iwc	3	5	7	10	20	60
0.0036	0.1	117,57	118,46	127,91	135,00	141,50	150,95	179,01	262,61
0.0072	0.2	166,31	167,49	180,78	190,83	200,28	213,57	253,16	371,61
0.0108	0.3	203,83	205,30	221,55	233,66	245,18	261,72	310,17	454,92
0.0144	0.4	235,14	236,91	255,52	269,70	282,99	301,90	358,02	525,52
0.018	0.5	262,91	264,97	285,95	301,60	316,37	337,64	400,27	587,26
0.0216	0.6	288,02	290,08	313,12	330,26	346,80	369,84	438,37	643,38
0.0252	0.7	311,06	313,42	338,23	356,84	374,27	399,38	473,53	695,08
0.0288	0.8	332,62	334,98	361,27	381,36	400,27	427,15	506,32	742,93
0.0324	0.9	352,71	355,07	383,43	404,40	424,49	452,85	537,04	787,83
0.036	1.0	371,61	374,27	404,11	426,26	447,53	477,37	565,99	830,66
0.072	2.0	524,93	528,77	570,71	602,32	632,16	674,69	799,94	1174,22
0.108	3.0	642,20	646,93	698,33	737,02	773,65	825,64	979,25	1438,01
0.144	4.0	740,57	746,18	805,56	850,16	892,40	952,67	1130,20	1659,85
0.18	5.0	827,12	833,03	899,79	949,71	996,98	1064,33	1262,84	1855,41

CERTIFICATES	TUV Aus tria CE Attestation of Conformity Certificate (EN 12266-1/ EN 12516-3)
APPLICATION	Gasses : Natural Gas, LPG, methane, propane, air, etc... non corr osive gaseous fluids.
INFORMATION	Experiments were carried out with air. Calculations based on gas with a density of 0.64 and a calorific value of 37 MJ/m3. The measured flow value is arranged accor ding to 15 °C and 101.3 kPa pressure.